M 417SR10

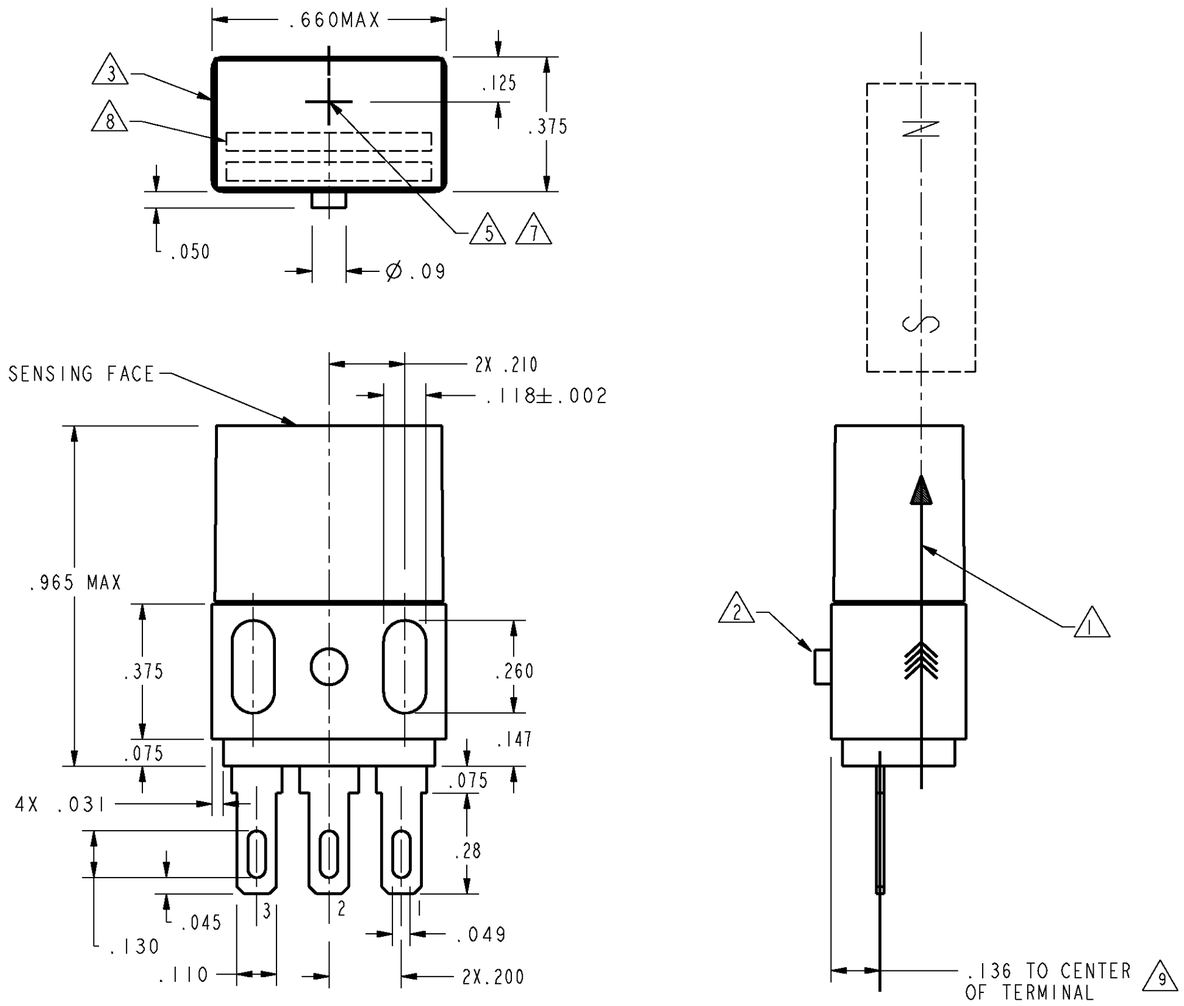

FIG. 1

OPERATING CHARACTERISTICS 4

GAUSS	
OPERATE MAX	250
RELEASE MIN	-250
DIFF MIN	40

ABSOLUTE MAXIMUM RATINGS

SUPPLY VOLTAGE (V_S) 6	-28 VDC TO +28 VDC
VOLTAGE EXTERNALLY APPLIED TO OUTPUT	+28 VOLTS DC MAX WITH SWITCH IN "OFF" CONDITION ONLY -0.5 VOLTS DC MIN WITH SWITCH IN "OFF" OR "ON" CONDITION
OUTPUT CURRENT	40 mA
TEMPERATURE OPERATE AND STORAGE	-40° C TO 150° C
MAGNETIC FLUX	NO LIMIT, THE CIRCUIT CANNOT BE DAMAGED BY MAGNETIC OVERDRIVE

ELECTRICAL CHARACTERISTICS

	MIN	TYP	MAX	REMARKS
SUPPLY CURRENT		11 mA	15.50 mA	PLUS LOAD CURRENT V_S = 4.5 TO 24 VDC 6 10
OUTPUT VOLTAGE (OPERATED) 4		0.15 VOLTS	0.4 VOLTS	SINKING 20mA
OUTPUT LEAKAGE CURRENT (RELEASED) 4			20μ A	LEAKAGE INTO SWITCH OUTPUT
OUTPUT SWITCHING TIME (SINKING 8 mA)				
RISE TIME 4		0.2μ SEC	1.5μ SEC	10 - 90%
FALL TIME		0.1μ SEC	0.5μ SEC	90 - 10%

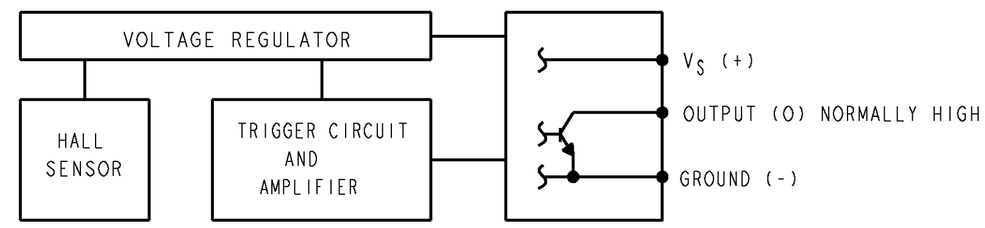

BLOCK DIAGRAM SHOWING CURRENT SINKING OUTPUTS

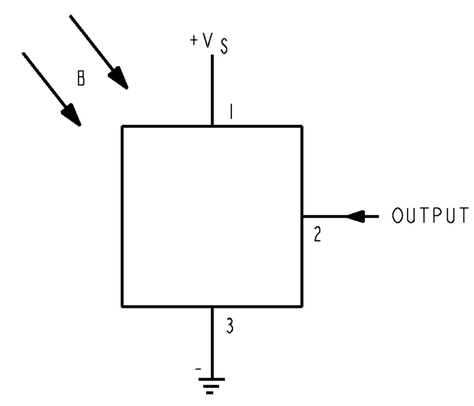

SWITCH SYMBOL

NOTES

1. FLUX ENTERING THE SOUTH POLE OF THE MAGNET WILL OPERATE THE SENSOR WHEN MAGNET IS POSITIONED AS SHOWN IN FIGURE 1. THIS ASSUMES THE CONVENTION THAT THE DIRECTION OF THE EXTERNAL FLUX OF A MAGNET IS FROM THE NORTH TO SOUTH POLE OF THE MAGNET
2. CAN BE STACKED ON .375 INCH CENTERS
3. CATALOG LISTING AND DATE CODE ARE LOCATED ON THE SIDE OF THE DEVICE
4. AT SUPPLY VOLTAGE OF 4.5 TO 24 VOLTS AND FULL TEMPERATURE RANGE
5. SENSITIVE AREA IS LOCATED WITHIN .025 OF THIS POINT AND .065 BEHIND THIS POINT
6. V_S IS THE UNREGULATED SUPPLY VOLTAGE
7. SENSITIVE AREA MARKED BY CROSSED LINES
8. MICRO SWITCH LOGO LOCATED IN THIS AREA
9. TERMINAL ACCEPTS .110 X .020 FASTON CONNECTOR
10. AT 24 ± 2°C

THIRD ANGLE PROJECTION

SCALE 3 : 1

DO NOT SCALE PRINT

UNLESS OTHERWISE SPECIFIED TOLERANCES ARE

ONE PLACE	(.0)	±.030
TWO PLACES	(.00)	±.015
THREE PLACES	(.000)	±.005
ANGLES		±

WEIGHT

THIS DRAWING COVERS A PROPRIETARY ITEM AND IS THE PROPERTY OF MICRO SWITCH. A DIVISION OF HONEYWELL. THIS DRAWING IS NOT TO BE COPIED OR USED WITHOUT THE APPROVAL OF MICRO SWITCH.

MICRO SWITCH a Honeywell Division
FED. MFG. CODE 91929

MAGNETICALLY OPERATED HALL SWITCH

CATALOG LISTING 417SR10

ANSI Y14.5M-1982 APPLIES

PTC/CAD 2D
DRAWN LJK 20SEP99
CHECK JAF 20SEP99
CHECK
REVISIONS
ISSUE 1
DRAWING NUMBER M 417SR10
PAGE 1 OF 1
RELEASE NO. CO-95088-B
REPLACES X111364-SR